DIMENSIONI D'INGOMBRO – OVERALL DIMENSIONS – DIMENSIONS D'ENCOMBREMENT RAUMBEDARF – DIMENSIONES TOTALES – DIMENSÕES

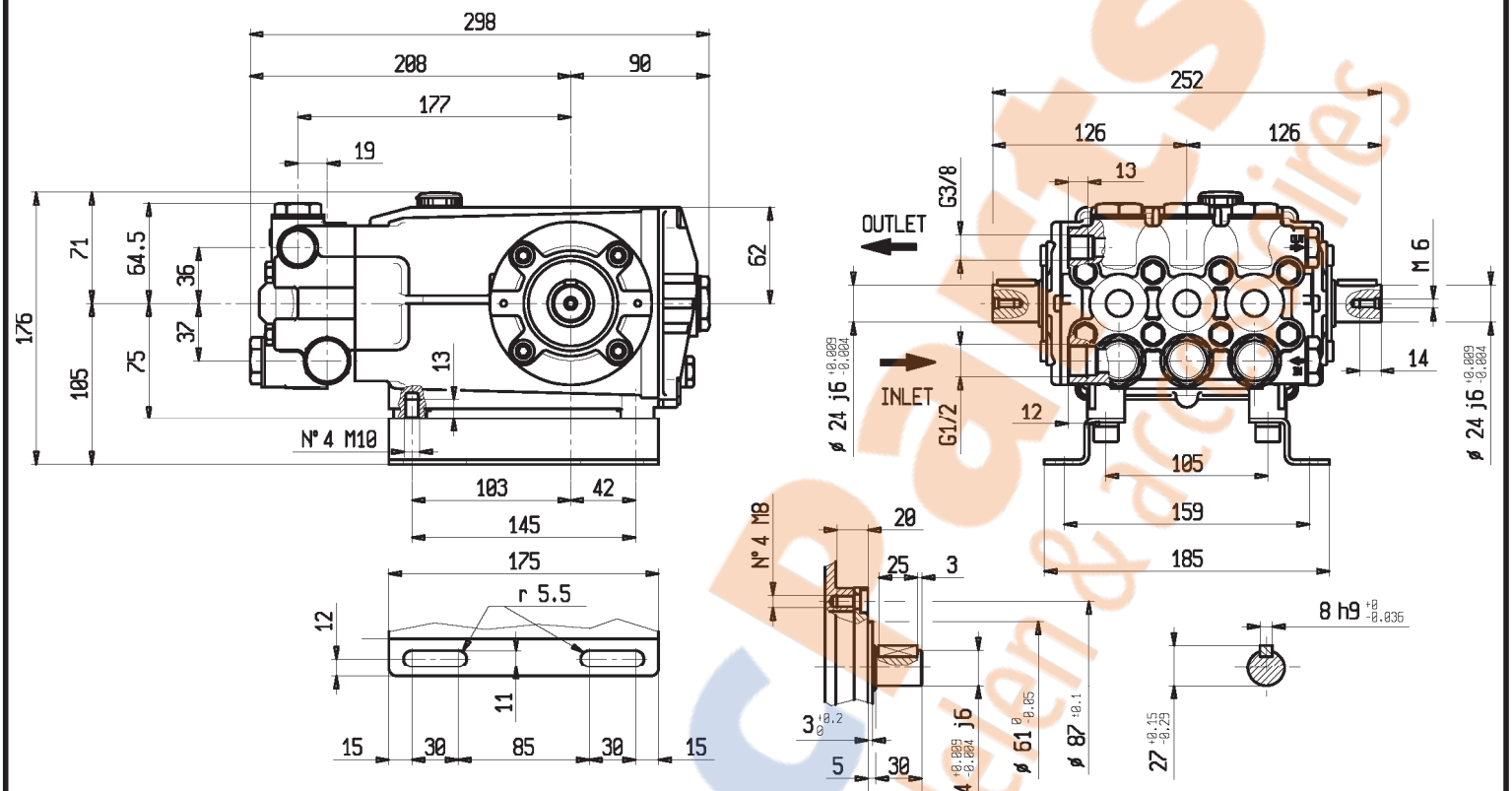

W92
W101

COD. DIS. 47.2140.00

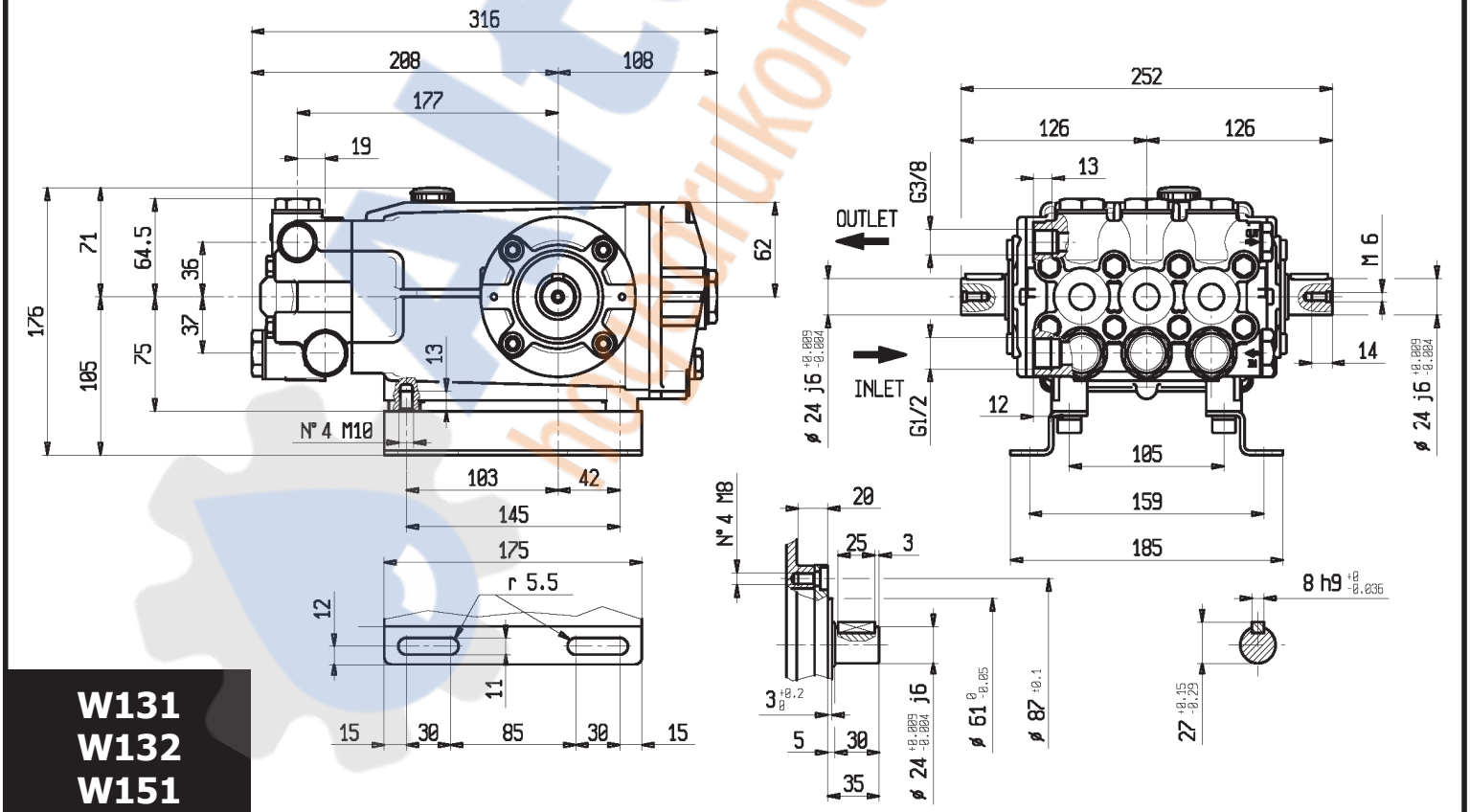

W131
W132
W151
W162
W201

COD. DIS. 47.2141.00

AltecParts
hydraulikonderdelen & accessoires